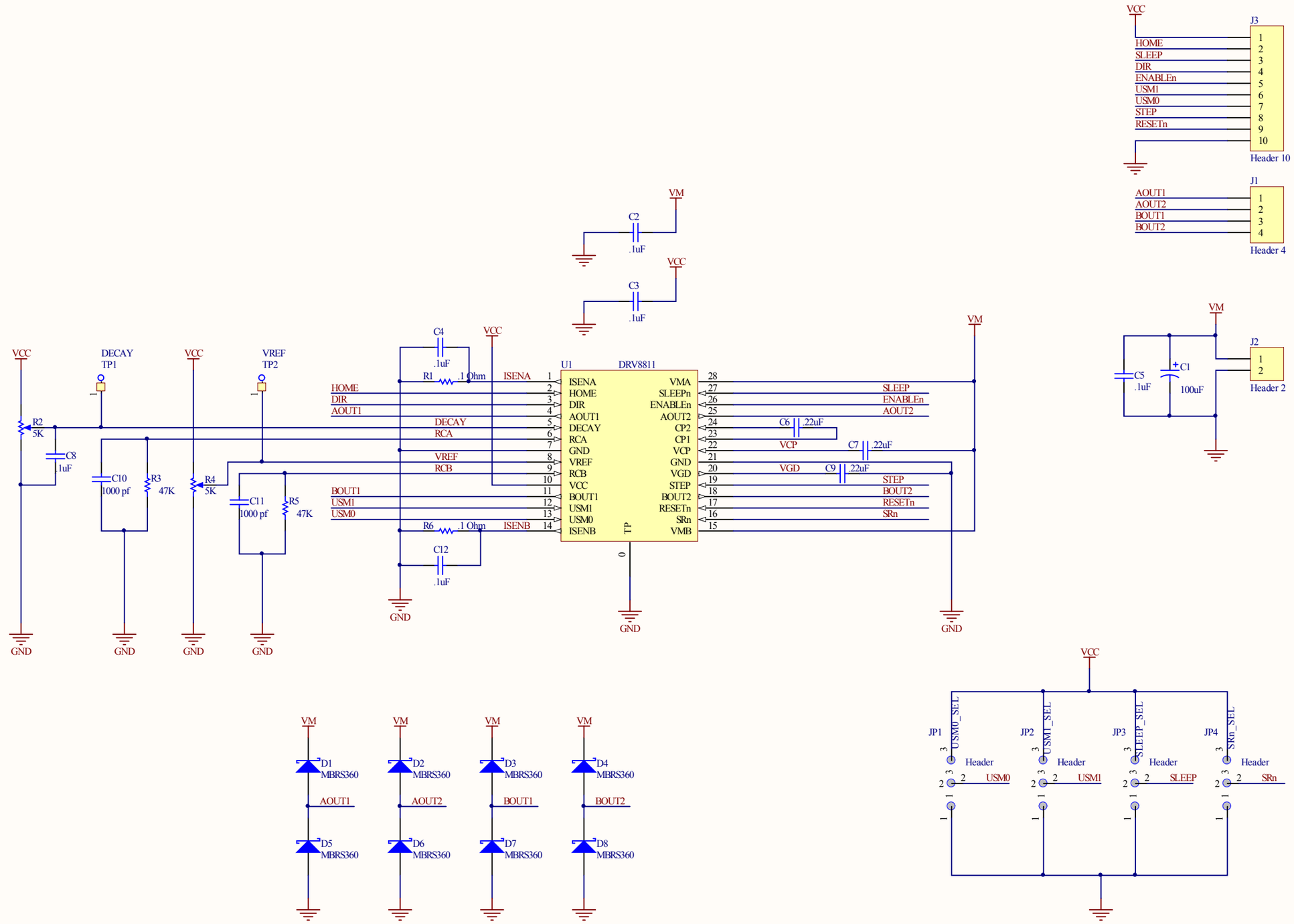
VCC
J3
HOME
SLEEP
DIR
ENABLEn
USM1
USM0
STEP
RESETn
Header 10
J1
AOUT1
AOUT2
BOUT1
BOUT2
Header 4
VM
C2
.1uF
C3
.1uF
C4
.1uF
R1
.1 Ohm
ISENA
U1
DRV8811
ISENA
HOME
DIR
AOUT1
DECAY
RCA
VREF
RCB
VCC
BOUT1
USM1
USM0
ISENB
VMA
SLEEPn
ENABLEn
AOUT2
CP2
CP1
VCP
GND
VGD
STEP
BOUT2
RESETn
SRn
VMB
TP
C6
.22uF
C7
.22uF
C9
.22uF
R6
.1 Ohm
C12
.1uF
VCC
DECAY
TP1
VREF
TP2
R2
5K
C8
.1uF
C10
1000 pf
R3
47K
R4
5K
C11
1000 pf
R5
47K
GND
J2
Header 2
C5
.1uF
C1
100uF
D1
MBRS360
D2
MBRS360
D3
MBRS360
D4
MBRS360
D5
MBRS360
D6
MBRS360
D7
MBRS360
D8
MBRS360
JP1
JP2
JP3
JP4
USM0_SEL
USM1_SEL
SLEEP_SEL
SRn_SEL
Header
USM0
USM1
SLEEP
SRn