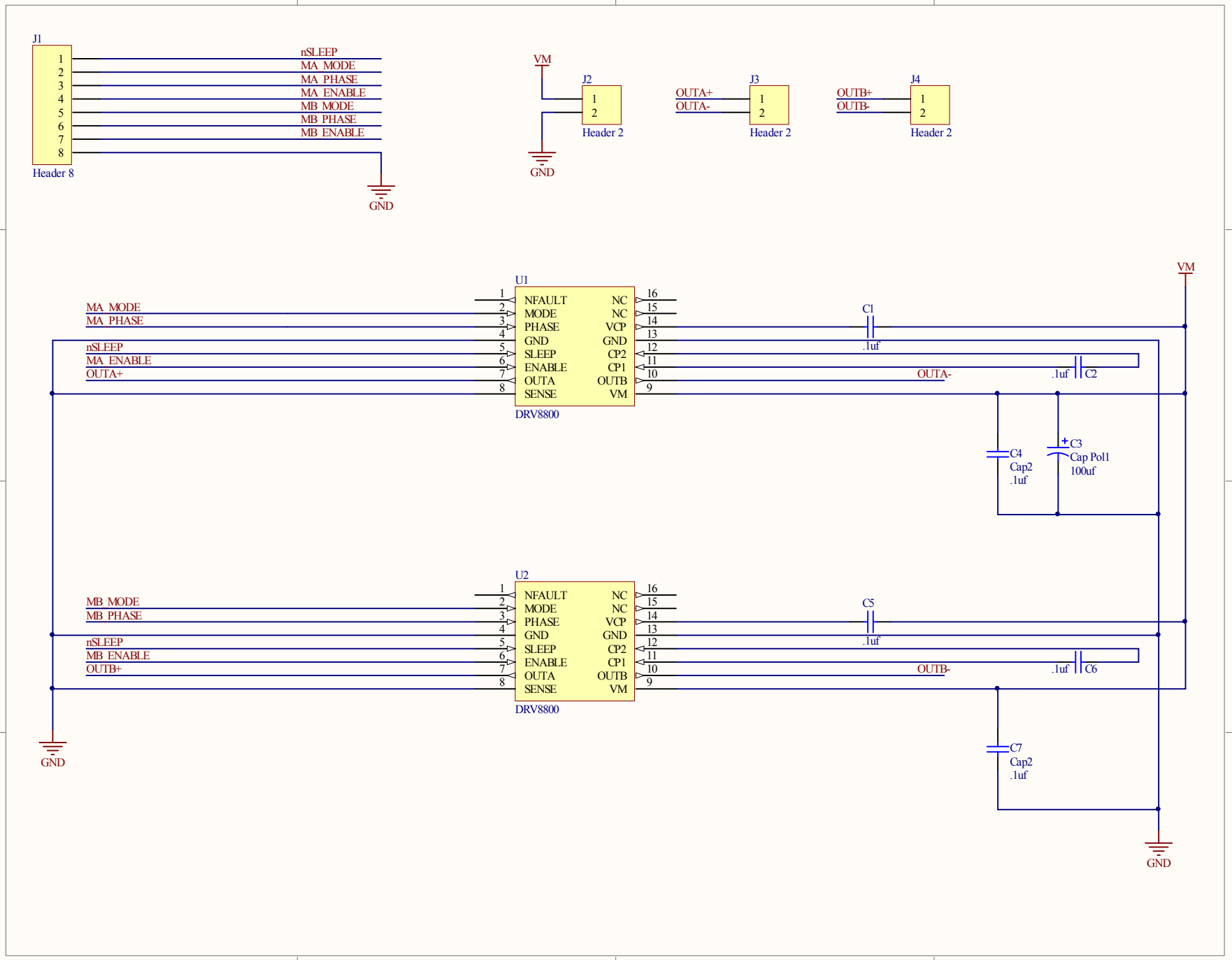
J1
Header 8
nSLEEP
MA_MODE
MA_PHASE
MA_ENABLE
MB_MODE
MB_PHASE
MB_ENABLE
GND
VM
J2
Header 2
GND
OUTA+
OUTA-
J3
Header 2
OUTB+
OUTB-
J4
Header 2
U1
DRV8800
NFAULT
MODE
PHASE
GND
SLEEP
ENABLE
OUTA
SENSE
NC
NC
VCP
GND
CP2
CP1
OUTB
VM
C1
.1uf
C2
.1uf
C3
Cap Pol1
100uf
C4
Cap2
.1uf
U2
DRV8800
C5
.1uf
C6
.1uf
C7
Cap2
.1uf
GND
VM
GND